EZ Glaze® | Installation

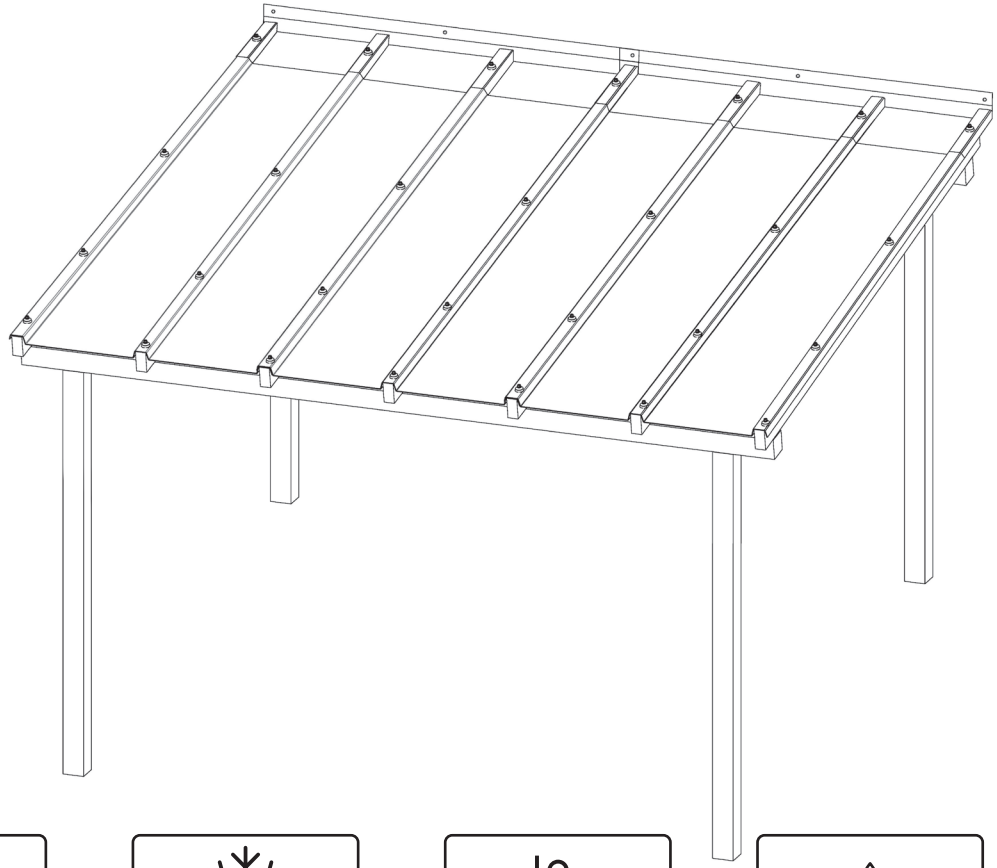

UV Resistance

Snow Load

Wind Resistance

Aesthetics

Easy To Install

EZ Glaze® - Product Page

Installation video

palram.com/us

Installation

Recommended Safety Equipment

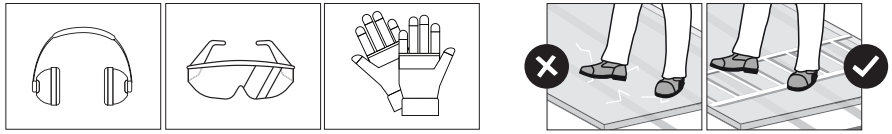

Do not step directly on the sheets between the purlins!
When installing EZ Glaze or doing maintenance work, always use ladders or crawl boards, supported by minimum three roof structural elements.

Required Tools

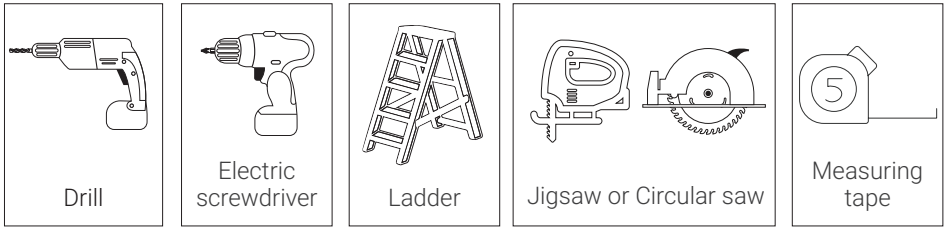

Accessories - Supplied by

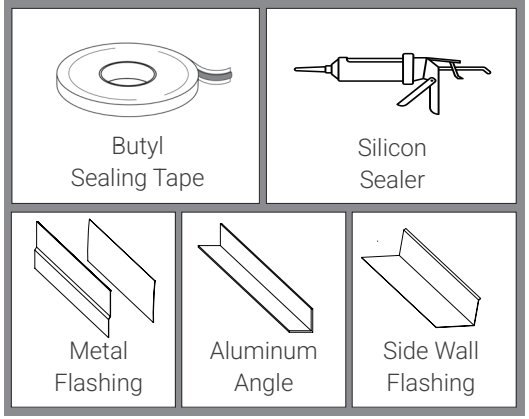

Supplied by

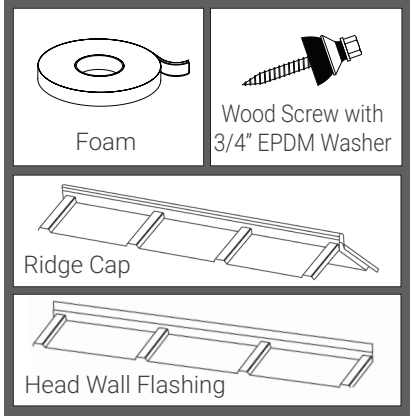

Profile drawing

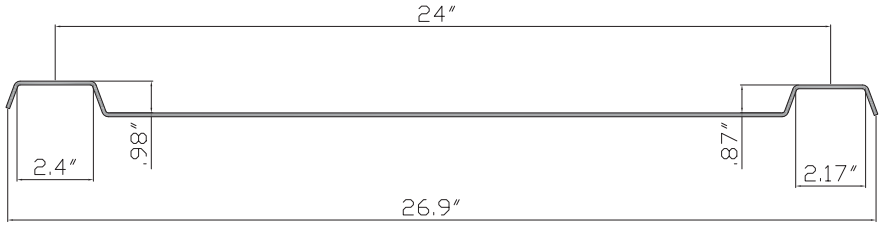

Overlapping

One side of the panel corrugation is larger than the opposite side panel corrugation.

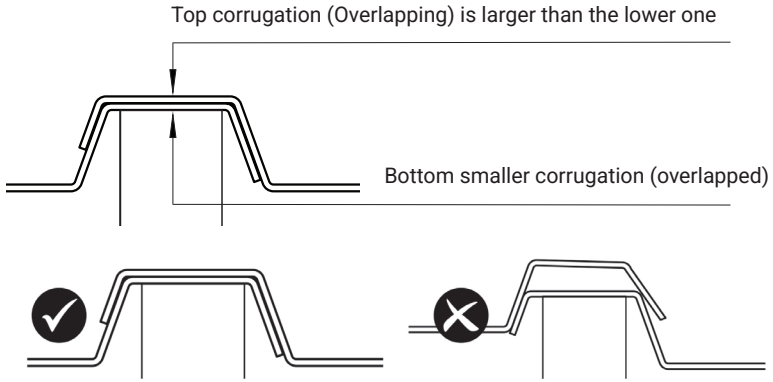

Note: EZ Glaze panels cannot be overlapped end to end.

Minimum Roof Slope

To ensure proper water runoff, pitch should be at least 5% (0.6" rise over 12" run).

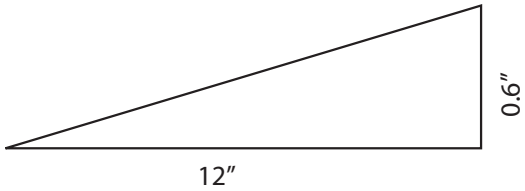

Installation Preparation

* Measure and spacing

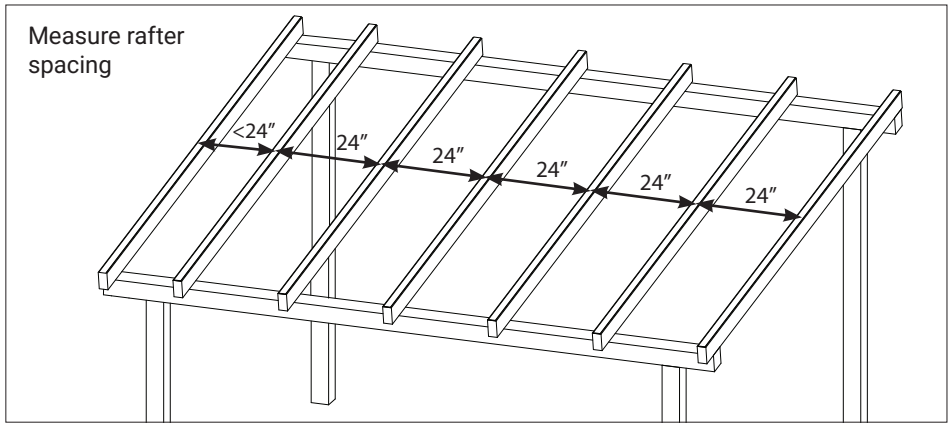

- To install EZ Glaze directly on rafters, the inner rafters must be 24" on center.
- If end rafters are less than 24" on center, then the end roof panels must be cut to proper width before installation (see typical finishing details in the last page).
- Make sure the rafters are perfectly perpendicular to the beams/wall.
- Max load capacity for 24" rafter spacing = 80 psf.

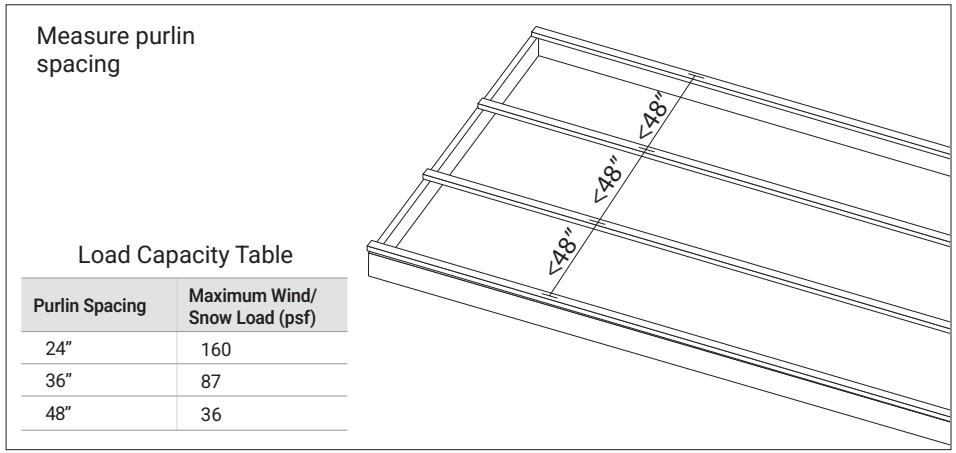

Load Capacity Table

Purlin Spacing	Maximum Wind/ Snow Load (psf)
24"	160
36"	87
48"	36

- The maximum distance between horizontal purlins for EZ Glaze is 48" on centers.
- The specified dimensions do not supersede the requirements of local construction codes.
- Deflection criterion is L/20.

* EZ Glaze - Installation direction recommendation

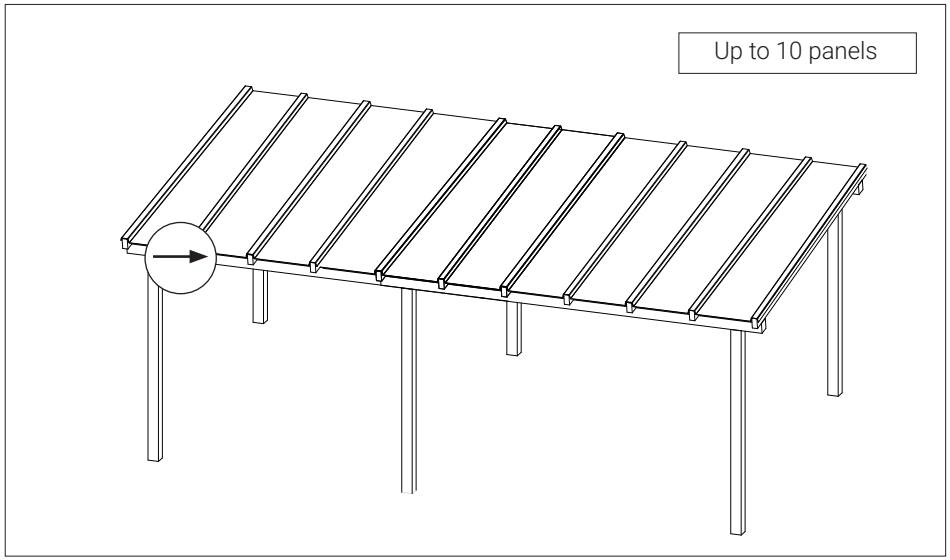

For 10 panels or less, start on one end of the structure and work across.

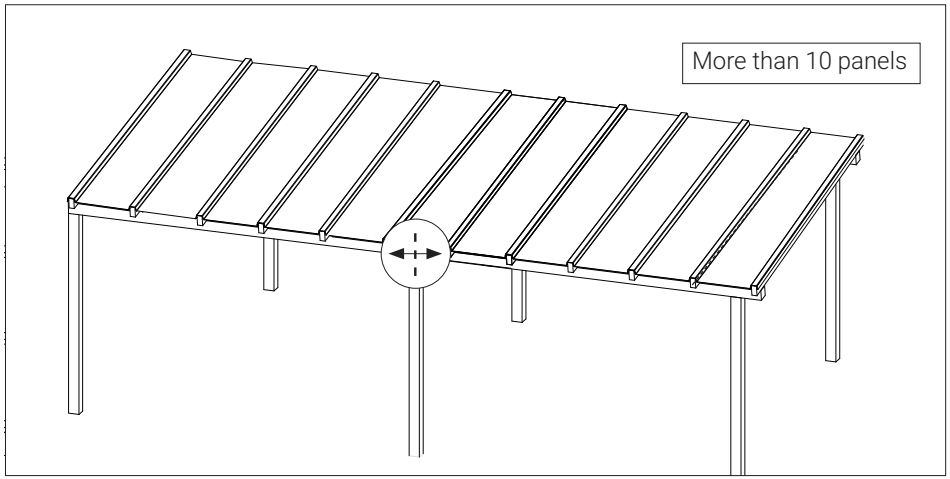

For more than 10 panels, start in the center of the structure and work out in both directions.

Installation

1 Foam tape application

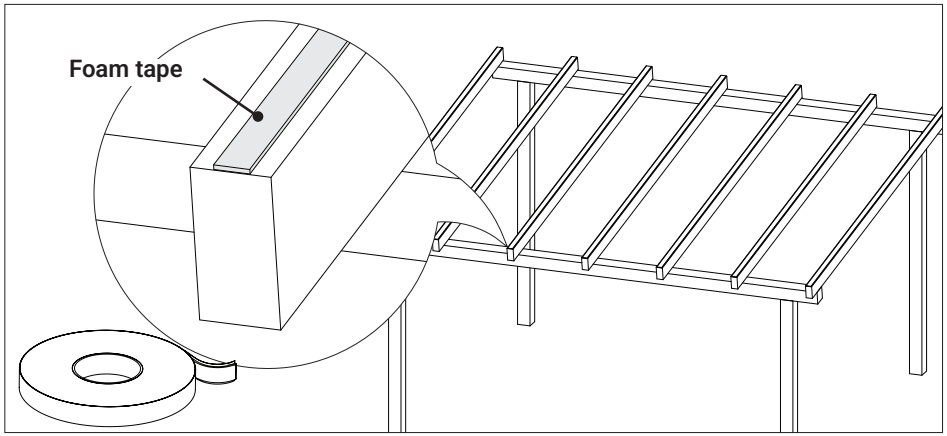

Foam tape provides flexible connection between the panel and the rafter.

2 Attaching the first EZ Glaze panel

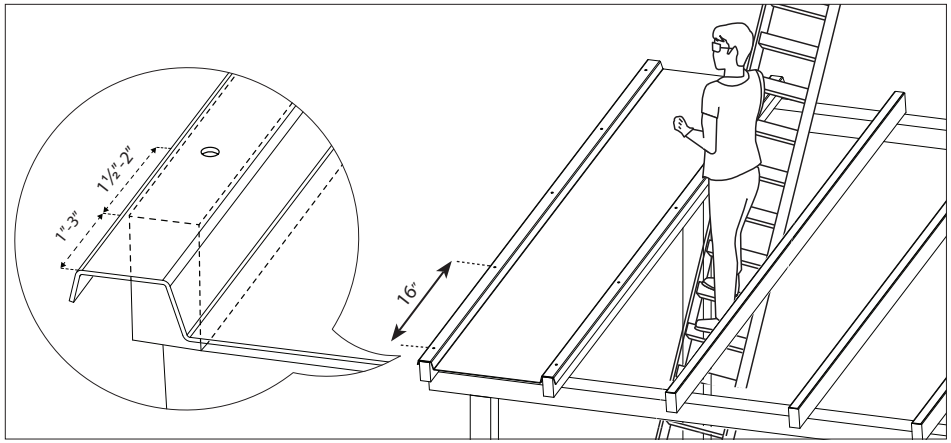

- Install the first EZ Glaze panel on the rafters, leaving 1”-3” overhang.
- Drill 3/8” holes along the outer corrugation, every 16”.
- First and last pre-drilled holes should be located 1½”-2” from the rafter’s top and bottom edges.

3 Attaching the first EZ Glaze panel

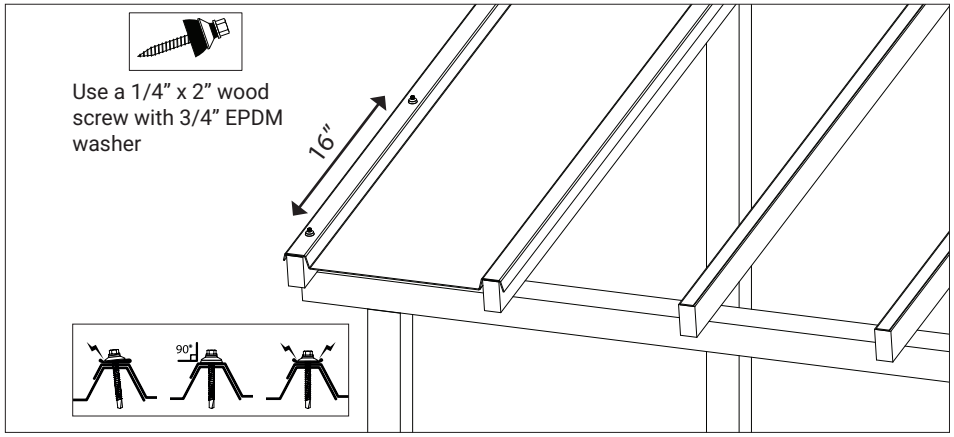

Attach the first EZ Glaze panel’s outer corrugation, using specified screws and washers through the pre-drilled holes. Start at the bottom edge and work your way up. Be careful not to over tighten the fasteners.

4 Attaching the second EZ Glaze panel

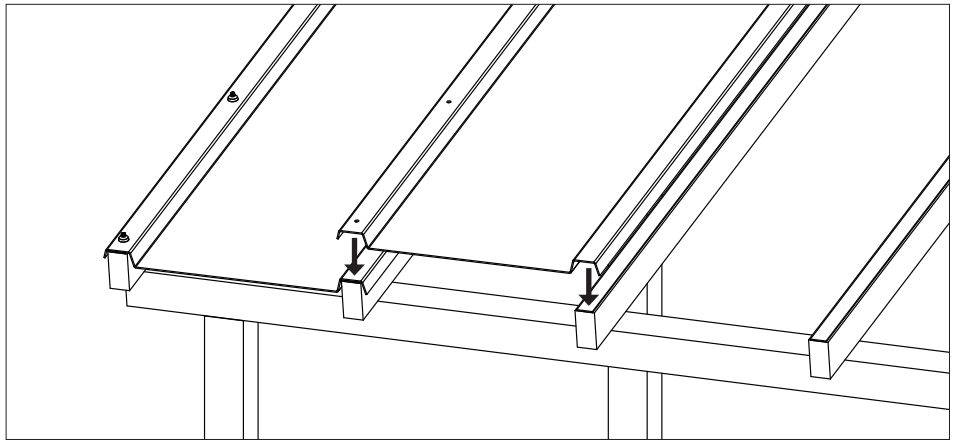

- Attach the second panel, overlapping the first one.
- Drill 3/8” holes through both panels on the lateral overlap, every 16”.

Installation

5 Attaching the second EZ Glaze panel

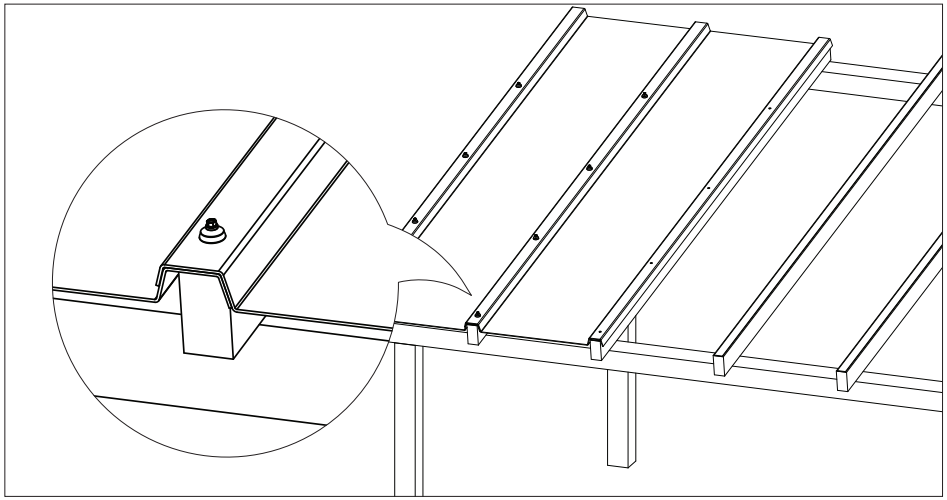

Using specified fasteners, attach the panels to the structure by fastening through the pre-drilled holes. Start at the bottom edge and work your way up.

6 Completing the installation

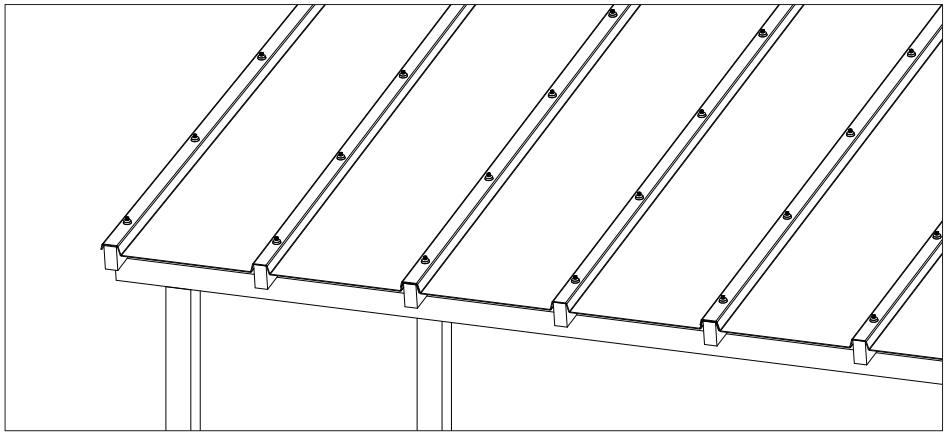

Repeat steps 4 & 5 with the remaining panels. Remove protective film from both sides of panels immediately after installing.

7 Applying butyl tape (purchased separately)

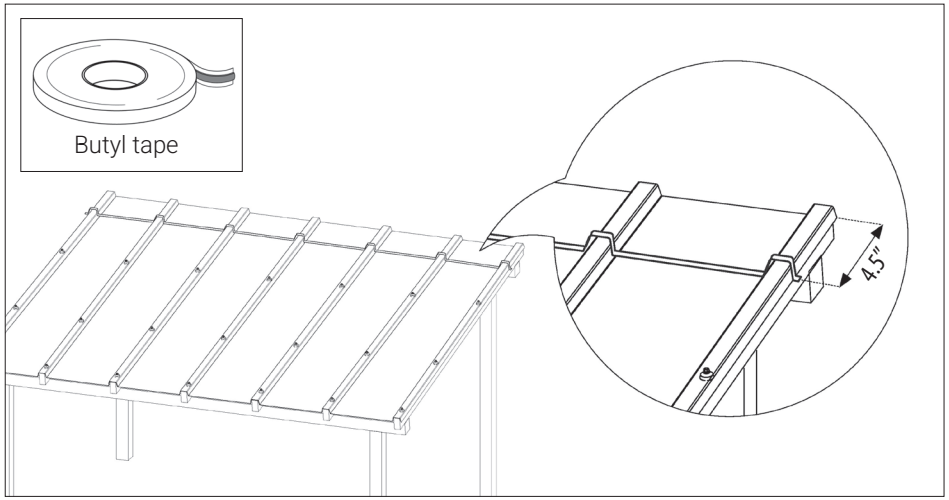

To conceal the butyl tape from view beneath the roof, install wood blocking along the butyl line.

8 Installing head wall flashing

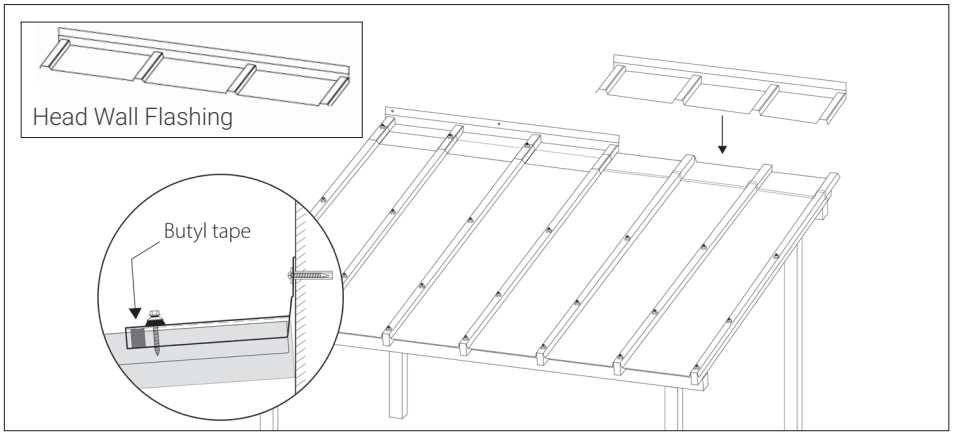

Pre-drill 3/8” holes through both the flashing and panels before fastening.

Installation - Typical Finishing Details

9 Installing side wall flashing (purchased separately)

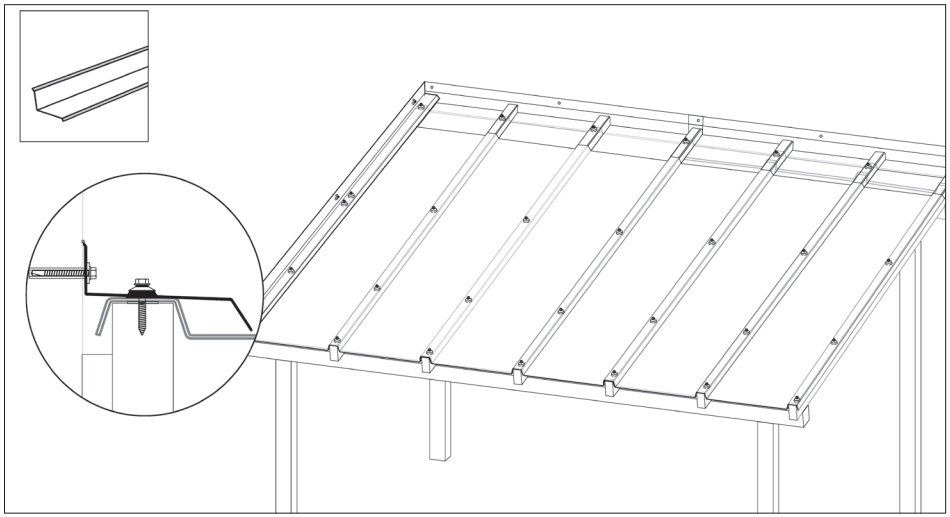

10 Applying silicone (purchased separately)

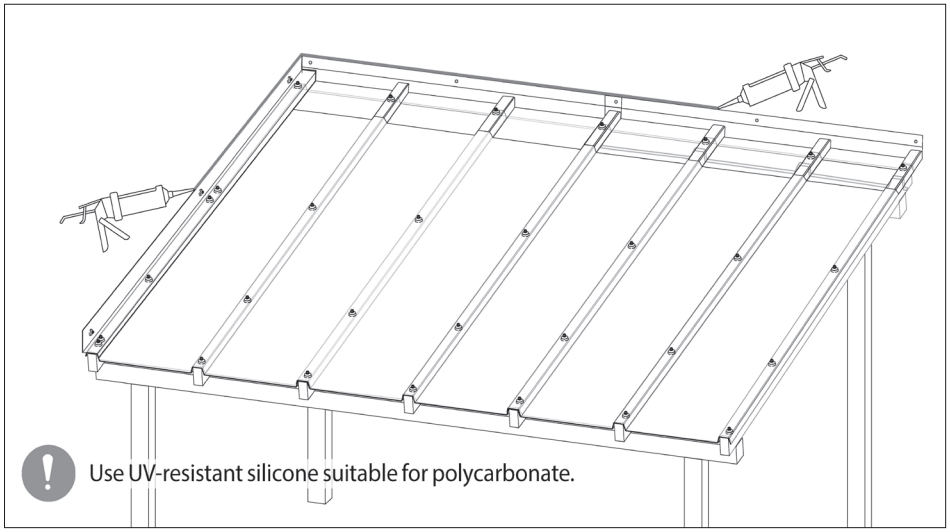

11 Installing ridge cap

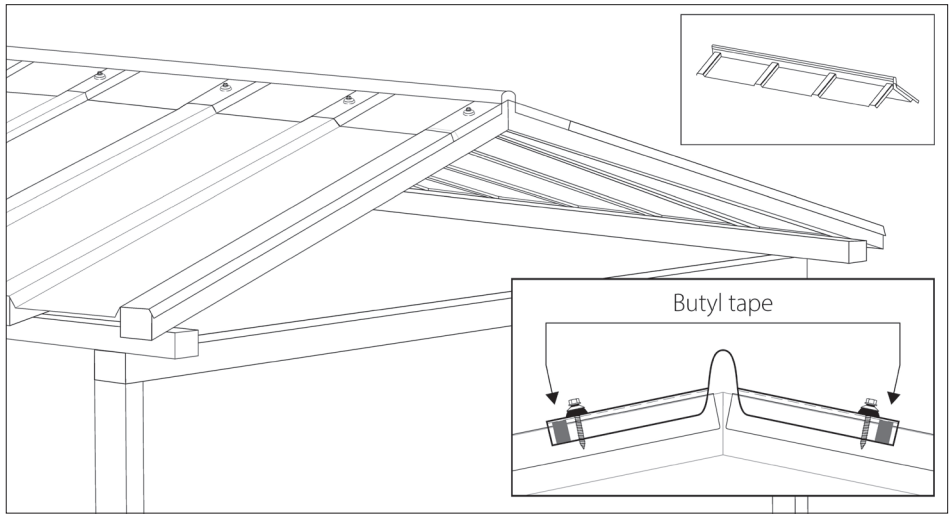

Pre-drill 3/8” holes through both the ridge cap and panels before fastening.
To conceal the butyl tape from view beneath the roof, install wood blocking along the butyl line.

Installation - Typical Finishing Details (Flashing accessories

*** Installing Side Wall Flashing with trimmed EZ Glaze panel**

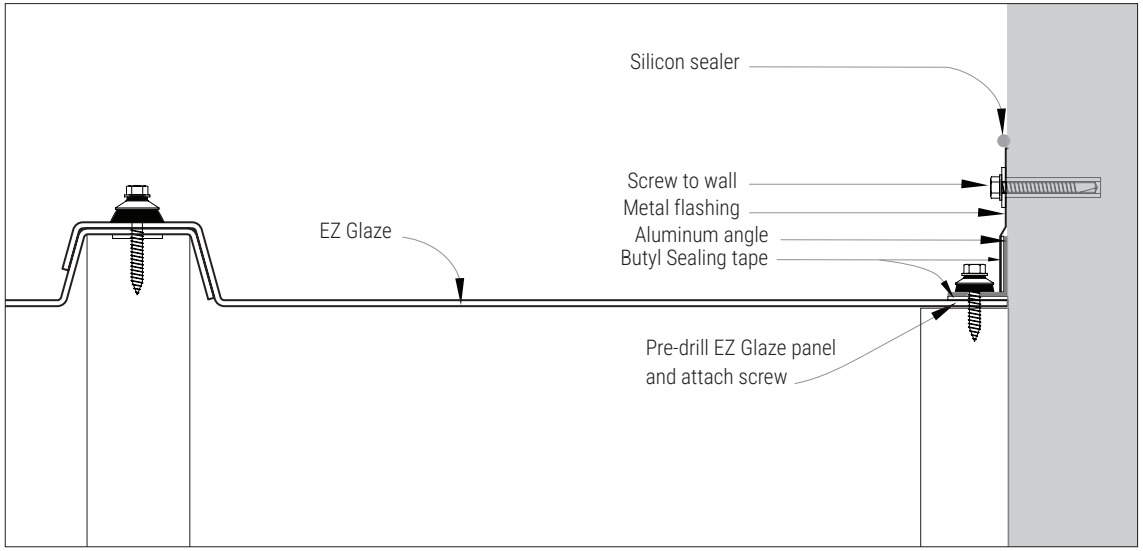

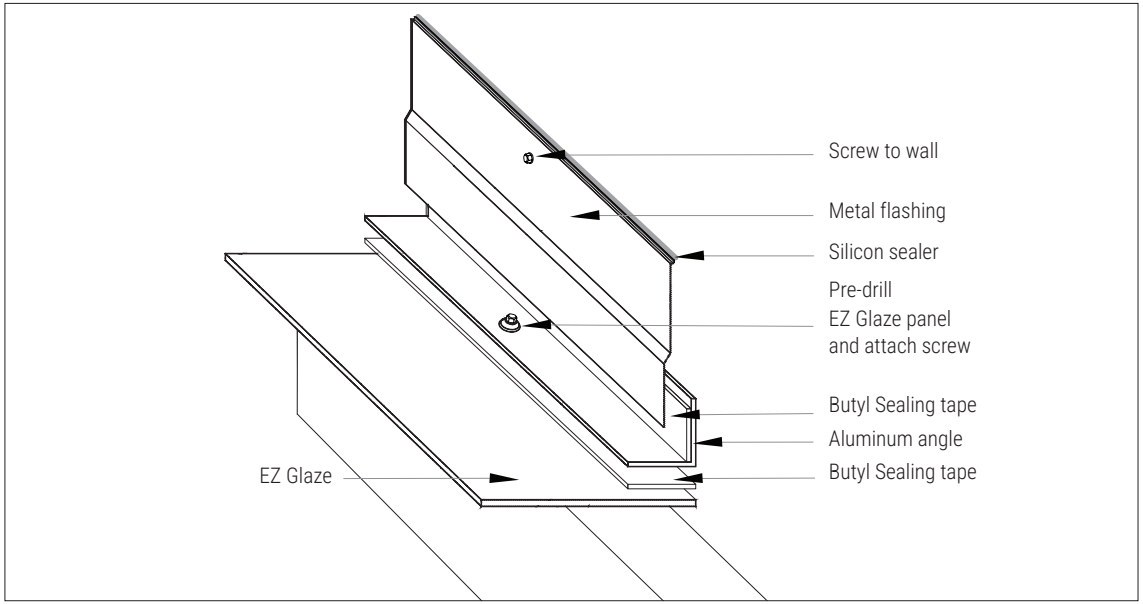

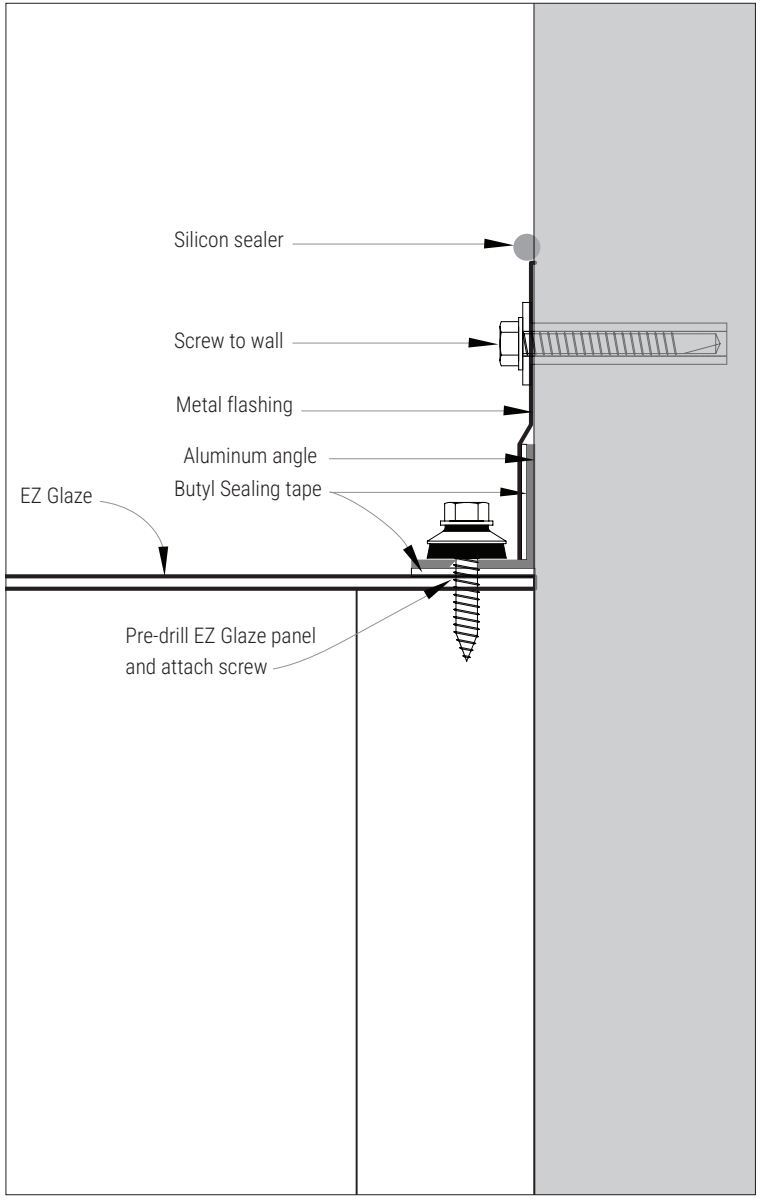

EZ Glaze® | Installation

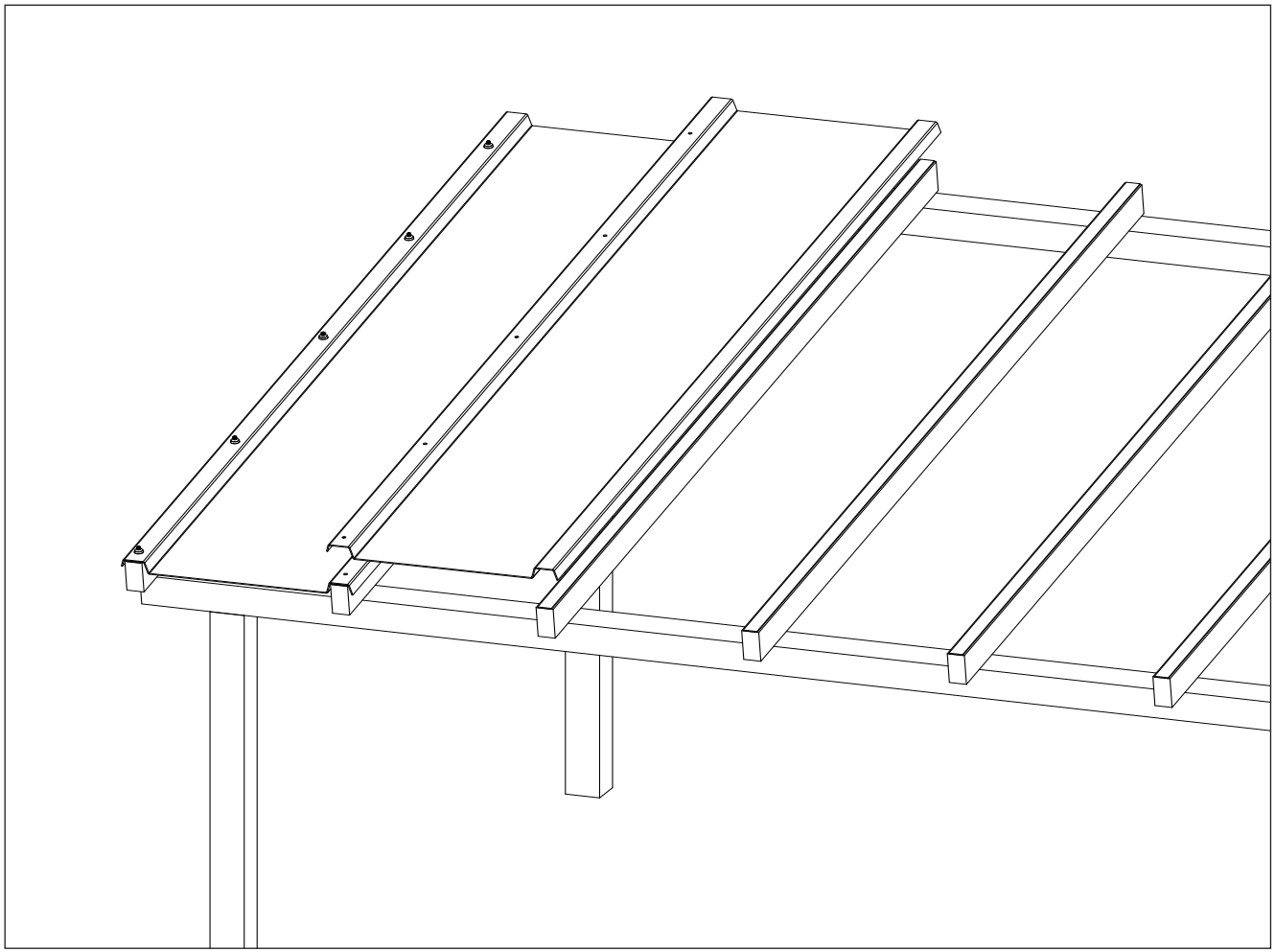

PALRAM AMERICAS
9735 Commerce Circle
Kutztown, PA, 19530 USA
800.999.9459
ContactUs.USA@palram.com
palram.com/us

Authorized Distributor

F 755 072325 RP

Inasmuch as Palram Americas has no control over the use (and/or installation method) to which others may put this material, it does not guarantee that the same results as those described herein will be obtained. Each user of the material should make their own test to determine the suitability of the material for their own particular use. In the event of a warranty claim for product failure, Palram Americas reserves the right to inspect any or all of the sheets involved and the installation site itself while the sheets are still in their original position and have not been removed or moved or altered in any way.
© 2025 Palram Americas